INTERSERV
Not just trunking INTERSERV TRUNKING

CAT 6 100/R2 COLUMN PROFILE WITH SEISMIC COLLAR

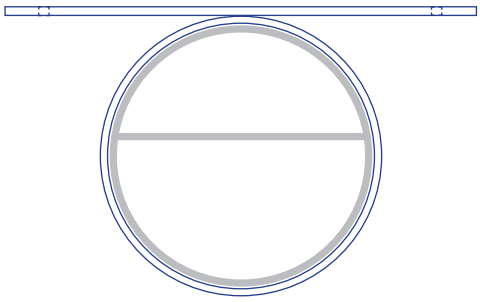

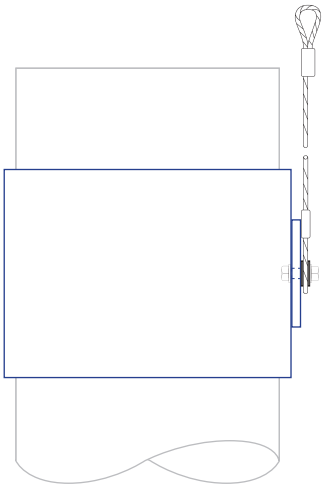

Option:
Collar restrained by seismic tethers retaining the column.

Column remains independant

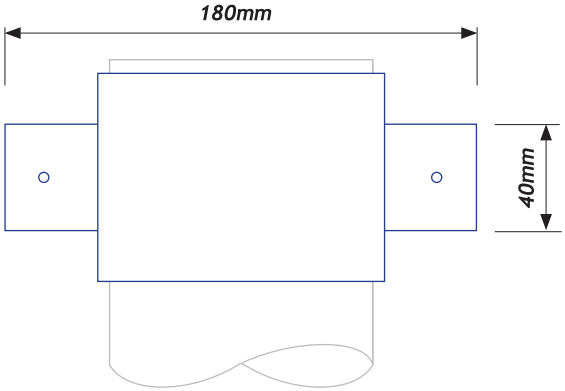

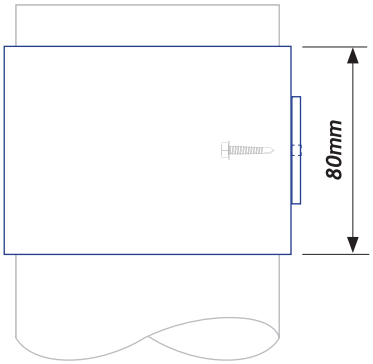

Option:

Collar fixed retaining the column.

Column remains independant

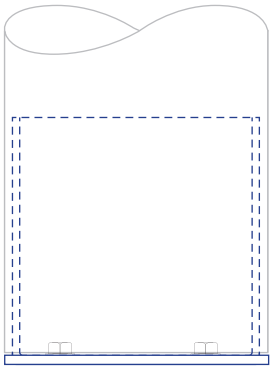

Option: Internal floor mount
Fixed to column or floating

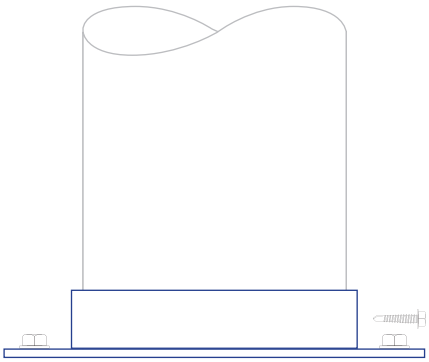

Option: External floor mount

*IMAGES ARE NOT TO SCALE / PROPORTION

COMPLIANCE: AS/NZS 3000
FIRE HAZARD: AS1530 PT3 1999
SEALING: AS 60529-2004

0800 828 914
15 Patiki Road, Avondale, Auckland, NZ
www.interserv.co.nz

INTERSERV
Not just trunking INTERSERV TRUNKING

CAT 6 100/R2 COLUMN PROFILE

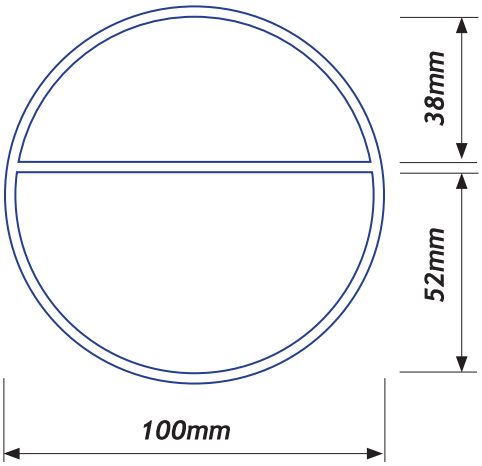





Extended column height †



Substantial floor mount

PROFILE LENGTHS	PART No.
3.1 metre	CAT 6 105.2236
6.2 metre	CAT 6 105.2266

Includes covers + floor mount

† Bespoke column heights including taller than 6.2m (12m maximum) options available.
Contact Interserv to discuss your particular needs.

ACCESSORIES*

SEISMIC COLLAR	PART No.
Seismic Collar 100R	100.0186



MOUNTS	PART No.
Floor Mount External	100.0166
Floor Mount Internal	100.0176



MOUNTING PAD	PART No.
100R Data & Plug mounting pad	100.0116



SEISMIC TETHER	PART No.
500mm	15.7000



FINISHING FLANGE	PART No.
PVC Ceiling Flange	100.0256



COMPLIANCE: AS/NZS 3000
FIRE HAZARD: AS1530 PT3 1999
SEALING: AS 60529-2004

*IMAGES ARE NOT TO SCALE / PROPORTION

0800 828 914
15 Patiki Road, Avondale, Auckland, NZ
www.interserv.co.nz