INTERSERV
Not just trunking INTERSERV TRUNKING

CAT 6 100/R1 INSTALLATION

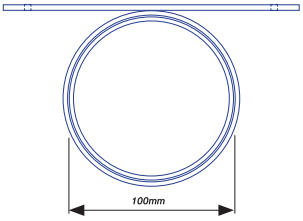

TOP COLLAR

Collar fixed to cable tray retaining the column.

Column remains independant

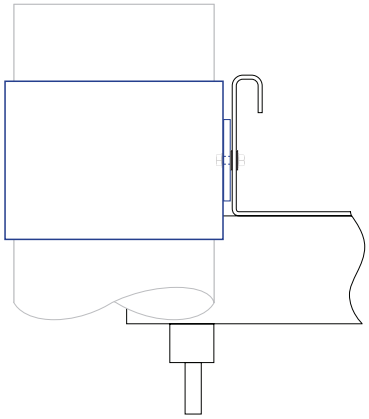

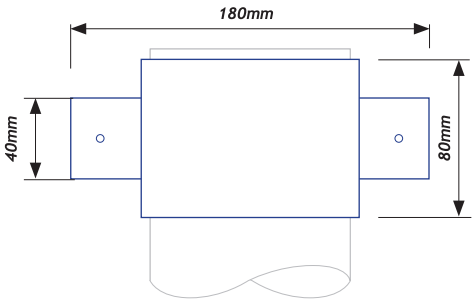

DESK COLLAR

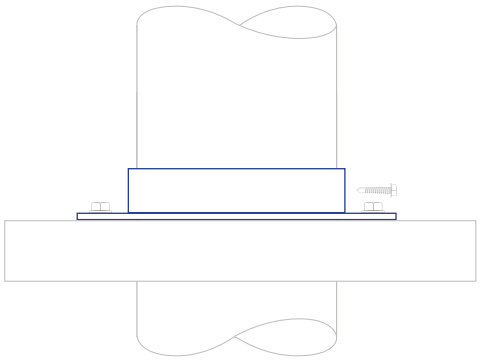

BASE MOUNTS

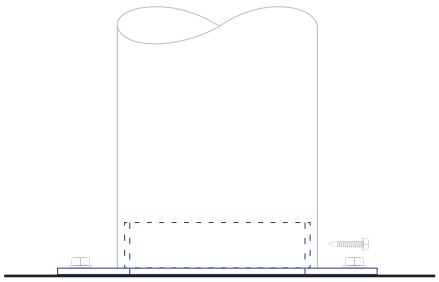

Option: Floor mount
Fixed to column or floating

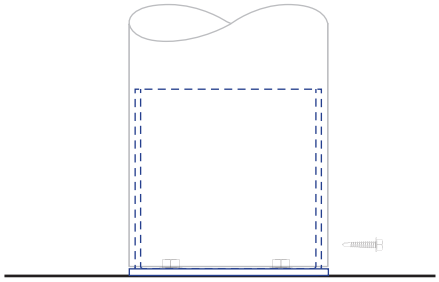

Option: Internal floor mount
Fixed to column or floating

*IMAGES ARE NOT TO SCALE / PROPORTION

COMPLIANCE: AS/NZS 3000
FIRE HAZARD: AS1530 PT3 1999
SEALING: AS 60529-2004

0800 828 914
15 Patiki Road, Avondale, Auckland, NZ
www.interserv.co.nz

INTERSERV
Not just trunking INTERSERV TRUNKING

CAT 6 100/R1 COLUMN PROFILE

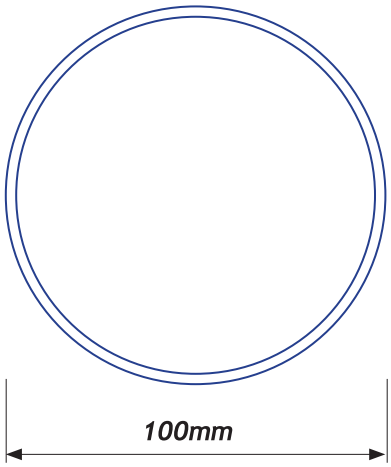





Extended column height †



Substantial floor mount

PROFILE LENGTHS †	PART No.
3.1 metre	CAT 6 100.1236
6.2 metre	CAT 6 100.1266

† Bespoke column heights including taller than 6.2m (12m maximum) options available.
Contact Interserv to discuss your particular needs.

ACCESSORIES*

SEISMIC COLLAR	PART No.
Seismic Collar 100R	100.0186



MOUNTS	PART No.
Floor Mount External	100.0166
Floor Mount Internal	100.0176





MOUNTING PAD	PART No.
100R Data & Plug mounting pad	100.0116



SEISMIC TETHER	PART No.
500mm	15.7000



FINISHING FLANGE	PART No.
PVC Ceiling Flange	100.0256



*IMAGES ARE NOT TO SCALE / PROPORTION

COMPLIANCE: AS/NZS 3000
FIRE HAZARD: AS1530 PT3 1999
SEALING: AS 60529-2004

0800 828 914
15 Patiki Road, Avondale, Auckland, NZ
www.interserv.co.nz